ERRATA CORRIGE	**N° 2 alla versione in lingua inglese**
DEL	**26 agosto 2010**
NORMA	**UNI EN 1993-1-8 (agosto 2005)**
TITOLO	**Eurocodice 3 – Progettazione delle strutture di acciaio – Parte 1-8: Progettazione dei collegamenti**

Punto della norma	Pagina	Oggetto della modifica	Modifica
-	I	Sommario	Il sommario diventa "La norma fornisce i metodi per la progettazione di collegamenti soggetti a carichi prevalentemente statici costituiti da acciaio di classe S235, S275, S355 e S460."
-	I	Relazioni internazionali	Sostituire "e tiene conto dell'errata corrige del dicembre 2005 (AC:2005)" con "e tiene conto dell'errata corrige di luglio 2009 (AC:2009)"
-	II	Premessa nazionale	Sostituire "errata corrige AC:2005" con "errata corrige AC:2009"
-	II	Dopo pagina II	Sostituire le pagine 3 e 4 con il file allegato

Documenti allegati: EN 1993-1-8:2005/AC:2009

EUROPEAN STANDARD

NORME EUROPÉENNE

EUROPÄISCHE NORM

EN 1993-1-8:2005/AC

July 2009
Juillet 2009
Juli 2009

ICS 91.010.30

English version
Version Française
Deutsche Fassung

Eurocode 3: Design of steel structures - Part 1-8: Design of joints

Eurocode 3: Calcul des structures en acier - Partie 1-8: Calcul des assemblages

Eurocode 3: Bemessung und Konstruktion von Stahlbauten - Teil 1-8: Bemessung von Anschlüssen

This corrigendum becomes effective on 29 July 2009 for incorporation in the three official language versions of the EN.

Ce corrigendum prendra effet le 29 juillet 2009 pour incorporation dans les trois versions linguistiques officielles de la EN.

Die Berichtigung tritt am 29.Juli 2009 zur Einarbeitung in die drei offiziellen Sprachfassungen der EN in Kraft.

EUROPEAN COMMITTEE FOR STANDARDIZATION
COMITÉ EUROPÉEN DE NORMALISATION
EUROPÄISCHES KOMITEE FÜR NORMUNG

Management Centre: Avenue Marnix 17, B-1000 Brussels

Ref. No.:EN 1993-1-8:2005/AC:2009 D/E/F

Modifications due to EN 1993-1-8:2005/AC:2005

1) Modifications to 2.2, 2.3, 2.5, 4.1, 6.4.1, 7.2.1, 7.3.1 and 7.4.2

The corrections are to add a "P" *after the clause number and change* "should" *to* "shall" *where appropriate. The corrections are underlined as shown.*

a) **"2.2 General requirements"**

"(1)P All joints shall have a design resistance such that the structure is capable of satisfying all the basic design requirements given in this Standard and in EN 1993-1-1."

"(3)P Joints subject to fatigue shall also satisfy the principles given in EN 1993-1-9."

b) **"2.3 Applied forces and moments"**

"(1)P The forces and moments applied to joints at the ultimate limit state shall be determined according to the principles in EN 1993-1-1."

c) **"2.5 Design assumptions"**

"(1)P Joints shall be designed on the basis of a realistic assumption of the distribution of internal forces and moments. The following assumptions shall be used to determine the distribution of forces:"

"(d) the assumed distribution of internal forces shall be realistic with regard to relative stiffnesses within the joint,"

d) **"4.1 General"**

"(2)P Welds subject to fatigue shall also satisfy the principles given in EN 1993-1-9."

e) **"6.4.1 General"**

"(1)P In the case of rigid plastic global analysis, a joint at a plastic hinge location shall have sufficient rotation capacity."

f) **"7.2.1 General"**

"(1)P The design values of the internal axial forces both in the brace members and in the chords at the ultimate limit state shall not exceed the design resistances of the members determined from EN 1993-1-1.

(2)P The design values of the internal axial forces in the brace members at the ultimate limit state shall also not exceed the design resistances of the joints given in 7.4, 7.5, 7.6 or 7.7 as appropriate."

g) **"7.3.1 Design resistance"**

"(1)P The welds connecting the brace members to the chords shall be designed to have sufficient resistance to allow for non-uniform stress-distributions and sufficient deformation capacity to allow for redistribution of bending moments."

h) **"7.4.2 Uniplanar joints"**

"(1)P In brace member connections subject only to axial forces, the design internal axial force $N_{i,Ed}$ shall not exceed the design axial resistance of the welded joint $N_{i,Rd}$ obtained from Table 7.2, Table 7.3 or Table 7.4 as appropriate."

Modifications due to EN 1993-1-8:2005/AC:2009

2) Modification to 1.1

Paragraph "(1)", *replace* "S355 and S460" *with:* "S355, S420, S450 and S460".

3) Modifications to 1.5

Paragraph "(3)", *add to the list between* "*h*i" *and* " *k*":

"h_z is the distance between centres of gravity of the effective width parts of a rectangular section beam connected to a I or H section column".

Paragraph "(6)", *add to the list after* "λ_{ov}":

"$\lambda_{ov,lim}$ is the overlap for which shear between braces and chord face may become critical".

4) Modification to 3.4.2

Paragraph "(1)", "Table 3.2", *5th row* "[Category]C", *2nd column* "Criteria", *3rd line, replace:*

" $F_{v,Ed} \leq N_{net,Rd}$ "

with:

" $\sum F_{v,Ed} \leq N_{net,Rd}$ ".

5) Modifications to 3.5

Paragraph "(2)", 'Table 3.3", *note* "[1)]", *1st list indent, replace* "exposed members and;" *with:* "exposed members (the limiting values are given in the table) and;".

Paragraph "(2)", 'Table 3.3", *note* "[1)]", *2nd list indent, replace* "to prevent corrosion." *with:* "to prevent corrosion (the limiting values are given in the table).".

6) Modifications to 3.6.1

Paragraph "(5)", *replace* "is greater or equal to" *with:* "is less than or equal to".

Paragraph "(16)", "Table 3.4", *3rd row 2nd column, in the formula for* "$F_{b,Rd}$", *replace* "a_b" *with:* "α_b".

Paragraph "(16)", "Table 3.4", *3rd row 2nd column, replace:*

"- for edge bolts: k_1 is the smallest of $2,8\frac{e_2}{d_o} - 1,7$ or $2,5$"

with:

"- for edge bolts k_1 is the smallest of $2,8\frac{e_2}{d_o} - 1,7$, $1,4\frac{p_2}{d_o} - 1,7$ and $2,5$".

7) Modification to 3.6.2.2

Paragraph "(2)", *replace* "of the bolt as obtained" *with:* "of the bolt or a group of bolts as obtained".

8) Modifications to 3.9.1

Paragraph "(1)", *replace equation number* "(3.6)" *with:* "(3.6a)"*; then, immediately after the latter equation, add the following one:*

$$" F_{s,Rd,ser} = \frac{k_s n \mu}{\gamma_{M3,ser}} F_{p,C} \qquad (3.6b)".$$

Paragraph "(1)", *under the equations, definition of* "*n*", *replace* "the friction surfaces" *with:* "the friction planes".

9) Modifications to 3.13.2

Paragraph "(3)", "Table 3.10", *6th row of the table, definition of* "f_y", *replace* "the lower of the design strengths" *with:* "the lower of the yield strengths".

Paragraph "(3)", *Equation* "(3.15)", *in the equation and in the explanation of the parameters under the equation*, *replace two times* "$F_{Ed,ser}$" *with:* "$F_{b,Ed,ser}$".

Paragraph "(3)", *Equation* "(3.16)", *replace* "$f_{h,Ed}$" *with:* "$f_{h,Rd}$".

10) Modification to 4.5.1

Paragraph "(1)", *replace* "The effective length of a fillet weld l " *with:* "The effective length of the fillet weld l_{eff} ".

11) Modification to 4.7.3

Paragraph "(1)", *replace* "Figure 4.6(a)" *with:* "Figure 4.6".

12) Modification to 4.14

Paragraph "(1)", "Table 4.2", *add a* "NOTE" *to the table:*

"NOTE Cold formed hollow sections according to EN 10.219 which do not satisfy the limits given in Table 4.2 can be assumed to satisfy these limits if these sections have a thickness not exceeding 12,5 mm and are Al-killed with a quality J2H, K2H, MH, MLH, NH or NLH and further satisfy C ≤ 0,18%, P ≤ 0,020% and S ≤ 0,012%.

In other cases welding is only permitted within a distance of 5t from the corners if it can be shown by tests that welding is permitted for that particular application.".

13) Modifications to 5.1.5

Paragraph "(3)", *replace the dot at the end of the second dash with a semi-column and add a third dash:*

"- the eccentricity is within the limits specified in 5.1.5(5).".

Paragraph "(7)", *1st sentence, replace* "and the compression chord members" *with:* "and the members".

Paragraph "(9)", "Table 5.3", *in last column on the right hand-side:*

Eccentricity
Yes
No
No
Not if 5.1.5(5) is satisfied

",

replace two times "No" *with:* "Not if 5.1.5(3) and (5) are satisfied"*; and replace in the lowest cell* "5.1.5(5)" with*:* "5.1.5(3) and (5)"*.*

14) Modification to 6.1.3

Paragraph "(4)"*,* "Table 6.1"*, page 63, 5th row* "10" "Bolts in tension"*, last column on the right* "Rotation capacity"*, replace* "6.4.7" *with:* "6.4.2"*.*

15) Modifications to 6.2.2

Paragraph "(5)"*, delete:* "either" *in the 2nd line; then replace* "or" *with:* "and" *in the 3rd line; and finally replace* "see 6.2.2(7), is sufficient" *with:* "see 6.2.2(7), added up is sufficient" *in the 4th line.*

Paragraph "(7)"*, Equation* "(6.2)"*, replace* " γ_{Mb} " *with:* " γ_{M2} "*; then replace* "α_b" *with:* "α_{bc}"*.*

Paragraph "(8)"*, replace* "The design shear resistance $F_{v,Rd}$ of a column base plate" *with:* "The design shear resistance $F_{v,Rd}$ between a column base plate and a grout layer"*.*

16) Modification to 6.2.4.1

Paragraph "(7)"*,* "Table 6.2"*, last row, replace the formula for* " L_b^* " *with:*

" $L_b^* = \dfrac{8,8m^3 A_s n_b}{\sum l_{eff,1} t_f^3}$ "*;*

then add to the list:

"n_b is the number of bolt rows (with 2 bolts per row)"*.*

17) Modification to 6.2.5

Paragraph "(2)"*,* "NOTE"*, replace* "The effective length and the effective width" *with:* "The values for the effective length and the effective width"*; then replace* "are notional lengths" *with:* "are notional values for these lengths"*.*

18) Modification to 6.2.6.1

Paragraph "(1)"*, replace* " $d / t_w \leq 69\varepsilon$ " *with:* " $d_c / t_w \leq 69\varepsilon$ "*.*

19) Modification to 6.2.6.4.1

Paragraph "(3)"*,* "Table 6.4"*, add a row at the bottom of the table containing the following paragraph:*

"e_1 is the distance from the centre of the fasteners in the end row to the adjacent free end of the column flange measured in the direction of the axis of the column profile (see row 1 and row 2 in Figure 6.9)."*.*

20) Modification to 6.2.6.4.2

Paragraph "(6)"*,* "Table 6.5"*, add a row at the bottom of the table containing the following paragraph:*

"e_1 is the distance from the centre of the fasteners in the end row to the adjacent stiffener of the column flange measured in the direction of the axis of the column profile (see row 1 and row 4 in Figure 6.9)."*.*

21) Modification to 6.2.6.4.3

Paragraph "(1)"*,* "NOTE"*, replace* "4.10(4) and 4.10(6)" *with:* "4.10"*.*

22) Modification to 6.2.6.11

Paragraph "(2)", *replace* "not be taken into consideration." *with:* "not be taken into consideration when determining the thickness of the base plate. Prying forces should be taken into account when determining the anchor bolts.".

23) Modification to 6.2.7.1

Paragraph "(14)", *replace* "to transmit 25%" *with:* "to transmit at least 25%".

24) Modifications to 6.2.7.2

Paragraph "(7)", *2nd line, delete* "given by 6.2.7.2(6)".

Paragraph "(8)", *2nd line, delete* "given by 6.2.7.2(6)".

Paragraph "(10)", "Figure 6.17", *replace the lower subfigure on the left hand-side with the following one:*

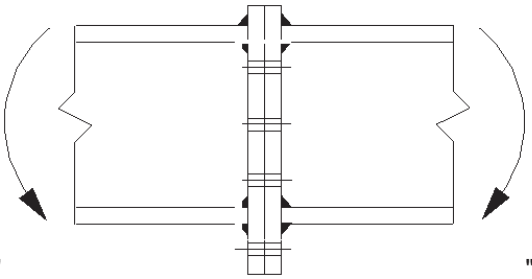

" ".

25) Modification to 6.2.8.1

Paragraph "(5)", *replace:*

"- Frictional design resistance at the joint between the base plate and its support.

- The design shear resistance of the anchor bolts."

with:

"- Frictional design resistance at the joint between the base plate and its support added up with the design shear resistance of the anchor bolts.".

26) Modification to 6.3.4

Paragraph "(1)", *definitions of* "$k_{T,1}$" *and* "$k_{T,r}$",*replace two times* "and should be taken as equal to the sum of the stiffness coefficients" *with:* "and the inverse of it should be taken as equal to the sum of the inverses of the stiffness coefficients".

27) Modifications to 6.4.2

Paragraph "(1)", *replace* "$d / t_w \leq 69\varepsilon$." *with:* "$d_{we} / t_w \leq 69\varepsilon$".

Paragraph "(2)", *under Equation* "(6.32)", *add to the clarification of the parameters:*

"d is the nominal diameter of the bolt

f_{ub} is the ultimate tensile strength of the bolt material".

28) Modifications to 7.1.2

Paragraph "(2)",*replace* "for the condition of pure bending" *with:* "for the condition of axial compression".

Paragraph "(6)", *add to the text:*

"If the overlap exceeds $\lambda_{ov,lim.}$=60% in case the hidden seam of the overlapped brace is not welded or $\lambda_{ov,lim.}$=80% in case the hidden seam of the overlapped brace is welded or if the braces are rectangular sections with $h_i < b_i$ and/or $h_j < b_j$, the connection between the braces and the chord face should be checked for shear.".

29) Modifications to 7.4.1

Paragraph "(3)", *replace* "all the criteria given in" *with:* "all the failure modes given in".

Paragraph "(3)", "Table 7.1", *replace the whole table with the following one:*

"

Diameter ratio		$0.2 \le d_i/d_0 \le 1,0$
Chords	tension	$10 \le d_0/t_0 \le 50$ (generally), but:
	compression	Class 1 or 2 and $10 \le d_0/t_0 \le 50$ (generally), but:
Braces	tension	$d_i/t_i \le 50$
	compression	Class 1 or 2
Overlap		$25\% \le \lambda_{ov} \le \lambda_{ov,lim.}$, see 7.1.2 (6)
Gap		$g \ge t_1 + t_2$

".

30) Modifications to 7.4.2

Paragraph "(2)", *Equation* "(7.3)", *replace the Equation with:* "$\frac{N_{i,Ed}}{N_{i,Rd}} + \left[\frac{M_{ip,i,Ed}}{M_{ip,i,Rd}}\right]^2 + \frac{|M_{op,i,Ed}|}{M_{op,i,Rd}} \le 1,0$".

Paragraph "(2)", "Table 7.2", *7th row, replace* "-K," *with:* "for K,", *and then replace* "all T," *with:* "T," – *so that the original wording:*

Punching shear failure	- K, N and KT gap joints and all T, Y and X joints	[i = 1, 2 or 3]

is corrected into the following one:

"Punching shear failure for K, N and KT gap joints and T, Y and X joints [i=1,2 or 3]".

Paragraph "(2)", "Table 7.3", *replace the table with the following one:*

"

Chord face failure	
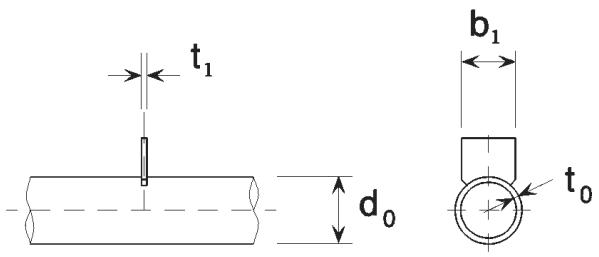	$N_{1,\mathrm{Rd}} = k_p f_{y0} t_0^2 (4 + 20\beta^2) / \gamma_{M5}$ $M_{\mathrm{ip},1,\mathrm{Rd}} = 0$ $M_{\mathrm{op},1,\mathrm{Rd}} = 0{,}5\ b_1\ N_{1,\mathrm{Rd}}$
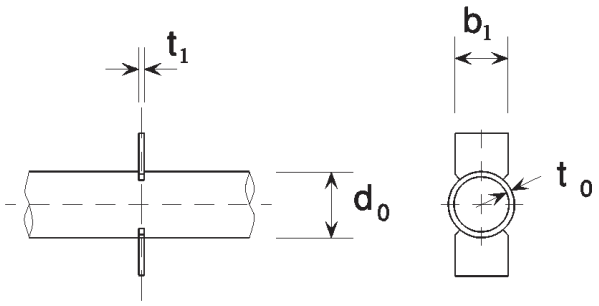	$N_{1,\mathrm{Rd}} = \dfrac{5 k_p f_{y0} t_0^2}{1 - 0{,}81\beta} / \gamma_{M5}$ $M_{\mathrm{ip},1,\mathrm{Rd}} = 0$ $M_{\mathrm{op},1,\mathrm{Rd}} = 0{,}5\ b_1\ N_{1,\mathrm{Rd}}$
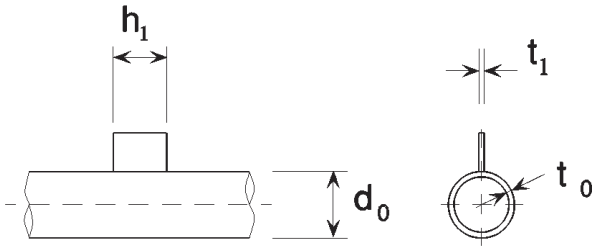	$N_{1,\mathrm{Rd}} = 5 k_p f_{y0} t_0^2 (1 + 0{,}25\eta) / \gamma_{M5}$ $M_{\mathrm{ip},1,\mathrm{Rd}} = h_1\ N_{1,\mathrm{Rd}}$ $M_{\mathrm{op},1,\mathrm{Rd}} = 0$
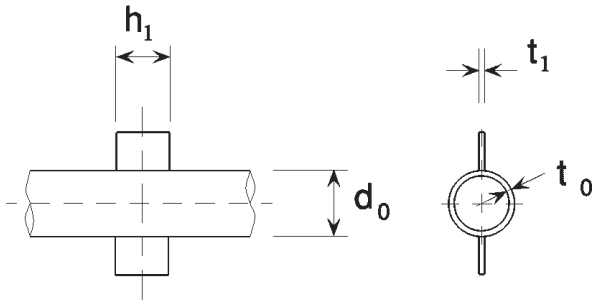	$N_{1,\mathrm{Rd}} = 5 k_p f_{y0} t_0^2 (1 + 0{,}25\eta) / \gamma_{M5}$ $M_{\mathrm{ip},1,\mathrm{Rd}} = h_1\ N_{1,\mathrm{Rd}}$ $M_{\mathrm{op},1,\mathrm{Rd}} = 0$

Punching shear failure	
$\sigma_{\max} t_1 = (N_{Ed} / A + M_{Ed} / W_{el}) t_1 \le 2 t_0 (f_{y0} / \sqrt{3}) / \gamma_{M5}$	
Range of validity	Factor k_p
In addition to the limits given in Table 7.1: $\beta \ge 0{,}4$ and $\eta \le 4$ where $\beta = b_1/d_0$ and $\eta = h_1/d_0$	For $n_\mathrm{p} > 0$ (compression): $k_\mathrm{p} = 1 - 0{,}3\ n_\mathrm{p}(1 + n_\mathrm{p})$ but $k_\mathrm{p} \le 1{,}0$ For $n_\mathrm{p} \le 0$ (tension): $k_\mathrm{p} = 1{,}0$

".

Paragraph "(2)", "Table 7.4", *7th row, replace the content of the following cell:*

I or H sections:	$\sigma_{max} t_1 = (N_{Ed} / A + M_{Ed} / W_{el})\, t_1 \le 2t_0 (f_{y0} / \sqrt{3}) / \gamma_{M5}$
RHS sections:	$\sigma_{max} t_1 = (N_{Ed} / A + M_{Ed} / W_{el})\, t_1 \le t_0 (f_{y0} / \sqrt{3}) / \gamma_{M5}$

"

with:

"I or H sections with $\eta > 2$ (for axial compression and out-of-plane bending) and RHS sections: $\sigma_{max} t_1 = (N_{Ed,1} / A_1 + M_{Ed,1} / W_{el,1}) t_1 \le t_0 (f_{y0} / \sqrt{3}) / \gamma_{M5}$

All other cases: $\sigma_{max} t_1 = (N_{Ed,1} / A_1 + M_{Ed,1} / W_{el,1}) t_1 \le 2t_0 (f_{y0} / \sqrt{3}) / \gamma_{M5}$

where t_1 is the flange or wall thickness of the transverse I-, H-, or RHS section".

Paragraph "(6)", "Table 7.6", *in the following cell:*

Member 1 is always in compression and member 2 is always in tension.

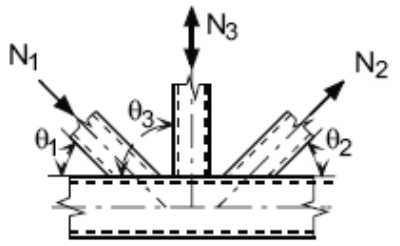

",

replace "Member 1 is always" *with* "Members 1 and 3 are here"*; then replace* "member 2 is always" *with* "member 2 is here"*; and finally replace the figure with the following one:*

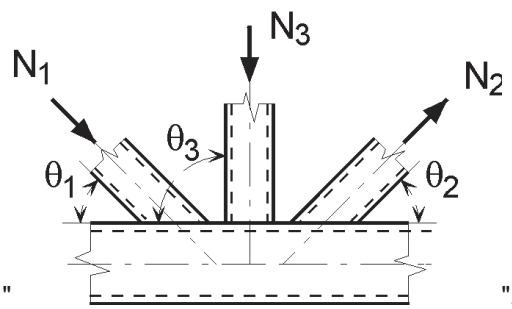

".

31) Modifications to 7.4.3

Paragraph "(2)", "Table 7.7", *3rd row, 1st column, replace the figure with the following one:*

" 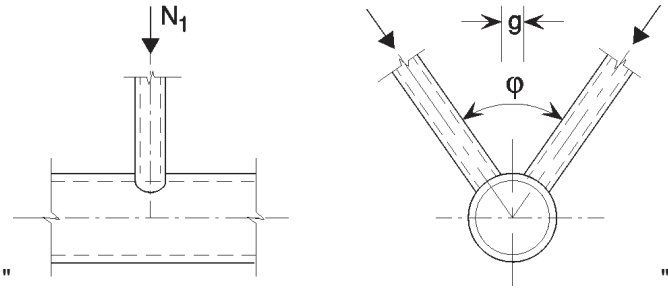

".

Paragraph "(2)", "Table 7.7", *last row, 1st column, replace the figure with the following one:*

" 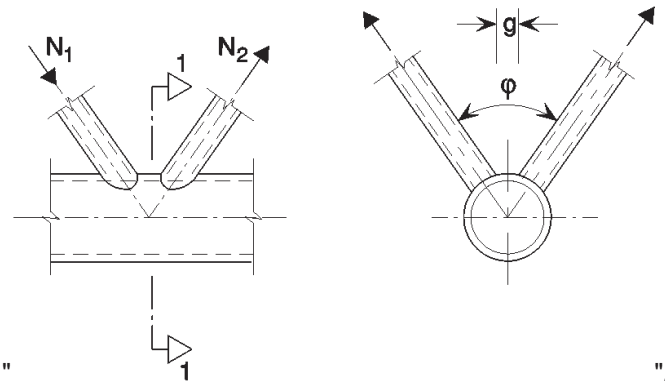

".

32) Modifications to 7.5.1

Paragraph "(3)", *replace* "all the criteria given in" *with:* "all the failure modes given in".

Paragraph "(3)", "Table 7.8", *4th row, last column on the right, in the following cell:*

$\lambda_{ov} \geq 25\%$ but $\lambda_{ov} \leq 100\%$ 2) and $b_i/b_j \geq 0{,}75$

“ ”,

replace the 1st line with: "25% ≤ λ_{ov} ≤ $\lambda_{ov,lim.}$ 2)"; *then delete the 2nd line; and finally replace the 3rd line with:*

"b_i/b_j ≤ 0.75".

Paragraph "(3)", "Table 7.8", *last row:*

1)	If $g/b_0 > 1{,}5(1-\beta)$ and $g/b_0 > t_1 + t_2$ treat the joint as two separate T or Y joints.
2)	The overlap may be increased to enable the toe of the overlapped brace to be welded to the chord.

" ",

in Note "1)", *replace* " $g/b_0 > t_1 + t_2$ " *with:* " $g > t_1 + t_2$ "; *and then replace Note* "2)" *with:*

"2) $\lambda_{ov,lim.}$ = 60% if the hidden seam is not welded and 80% if the hidden seam is welded. If the overlap exceeds $\lambda_{ov,lim.}$ or if the braces are rectangular sections with $h_i < b_i$ and/or $h_j < b_j$, the connection between the braces and chord face has to be checked for shear.".

Paragraph "(3)", "Table 7.8", *replace all the occurrences of* "class 2" *with* "class 1 or 2".

33) Modifications to 7.5.2.1

Paragraph “(4)”, *delete:* "Table 7.10,".

Paragraph “(4)”, “Table 7.10”, *in the following cells:*

“

K and N overlap joints *)	Brace failure $25\% \le \lambda_{ov} < 50\%$
Member i or member j may be either tension or compression but one should be tension and the other compression.	$N_{i,Rd} = f_{yi} t_i \left(b_{eff} + b_{e,ov} + \frac{\lambda_{ov}}{50}(2h_i - 4t_i) \right) / \gamma_{M5}$

“,

in the Equation, replace " $+\frac{\lambda_{ov}}{50}(2h_i - 4t_i)$ " *with:* " $2h_i \frac{\lambda_{ov}}{50} - 4t_i$ ".

Paragraph “(4)”, “Table 7.10”, *1st column, 7th row (cell dedicated to* "K and N overlap joints"*), replace the figure with the following one:*

"

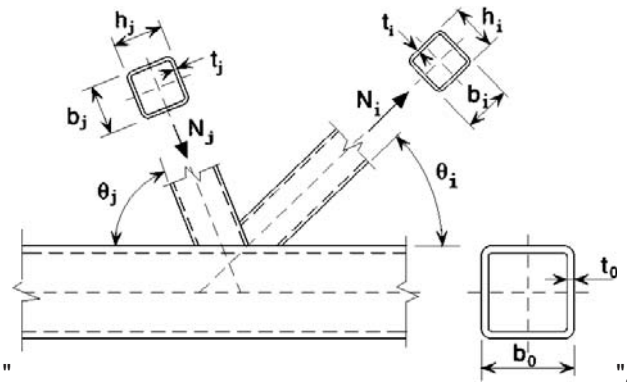

".

Paragraph “(4)”, “Table 7.10”, *add to the text under* “*)” *after the last sentence:* "See also Table 7.8."

Paragraph “(4)”, “Table 7.11”, *replace the table with the following one:*

"

Type of joint	Design resistance
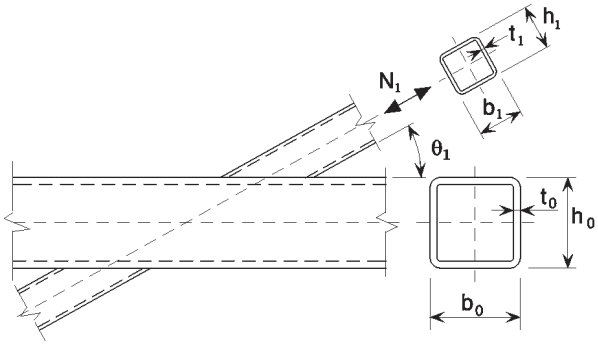	Chord face failure $\beta \le 0{,}85$
	$N_{1,\mathrm{Rd}} = \dfrac{k_n f_{y0} t_0^2}{(1-\beta)\sin\theta_1}\left(\dfrac{2\eta}{\sin\theta_1} + 4\sqrt{1-\beta}\right) / \gamma_{M5}$
	Chord side wall buckling [1] $\beta = 1{,}0$ [2]
	$N_{1,\mathrm{Rd}} = \dfrac{k_n f_b t_0}{\sin\theta_1}\left(\dfrac{2h_1}{\sin\theta_1} + 10t_0\right) / \gamma_{M5}$
	Brace failure $\beta \ge 0{,}85$
	$N_{1,\mathrm{Rd}} = f_{yi} t_1 (2h_1 - 4t_1 + 2b_{eff}) / \gamma_{M5}$
	Punching shear $0{,}85 \le \beta \le (1 - 1/\gamma)$
	$N_{1,\mathrm{Rd}} = \dfrac{f_{y0} t_0}{\sqrt{3}\sin\theta_1}\left(\dfrac{2h_1}{\sin\theta_1} + 2b_{e,p}\right) / \gamma_{M5}$

[1] For X joints with $\cos\theta_1 > h_1/h_0$ use the smaller of this value and the design shear resistance of the chord side walls given for K and N gap joints in Table 7.12.

[2] For $0{,}85 \le \beta \le 1{,}0$ use linear interpolation between the value for chord face failure at $\beta = 0{,}85$ and the governing value for chord side wall failure at $\beta = 1{,}0$ (side wall buckling or chord shear).

For circular braces, multiply the above resistances by $\pi/4$, replace b_1 and h_1 by d_1 and replace b_2 and h_2 by d_2.

For tension: $f_b = f_{y0}$ For compression: $f_b = \chi f_{y0}$ (T and Y joints) $f_b = 0{,}8\,\chi f_{y0} \sin\theta_1$ (X joints) where χ is the reduction factor for flexural buckling obtained from EN 1993-1-1 using the relevant buckling curve and a normalized slenderness $\bar{\lambda}$ determined from: $\bar{\lambda} = 3{,}46 \dfrac{\left(\dfrac{h_0}{t_0} - 2\right)\sqrt{\dfrac{1}{\sin\theta_1}}}{\pi\sqrt{\dfrac{E}{f_{y0}}}}$	$b_{\mathrm{eff}} = \dfrac{10}{b_0/t_0}\dfrac{f_{y0}t_0}{f_{yi}t_1} b_1$ but $b_{\mathrm{eff}} \le b_1$ $b_{\mathrm{e,p}} = \dfrac{10}{b_0/t_0} b_1$ but $b_{\mathrm{e.p}} \le b_1$ For $n > 0$ (compression): $k_n = 1{,}3 - \dfrac{0{,}4n}{\beta}$ but $k_n \le 1{,}0$ For $n \le 0$ (tension): $k_n = 1{,}0$

".

Paragraph "(4)", "Table 7.12", *in the following cell:*

“

For circular braces, multiply the above resistances by $\pi/4$, replace b_1 and h_1 by d_1 and replace b_2 and h_2 by d_2.

“,

replace "h_2 by d_2" *with:* "h_2 by d_2, except for chord shear".

Paragraph “(4)”, “Table 7.12”, *in the following cell:*

“

$A_v = (2h_0 + \alpha b_0)t_0$ For a square or rectangular brace member: $\alpha = \sqrt{\dfrac{1}{1+\dfrac{4g^2}{3t_0^{\,2}}}}$ where g is the gap, see Figure 1.3(a). For a circular brace member: $\alpha = 0$

“,

last line, replace:

"For a circular brace member: α = 0"

with:

"For circular brace members: α = 0".

Paragraph “(4)”, “Table 7.12”, *2nd column, 13th row, replace* " $b_{e,p} = \dfrac{10}{b_0 t_0} b_i$ " *with:* " $b_{e,p} = \dfrac{10}{b_0 / t_0} b_i$ ".

Paragraph “(4)”, “Table 7.13”, *in the following cells:*

“

Brace failure $[i = 1]$
$N_{1,Rd} = f_{y1} t_1 b_{eff} / \gamma_{M5}$ *)

“,

replace:

"Brace failure [i=1]"

with:

"Chord face failure β ≤ 0,85";

then replace formula for “$N_{1,Rd}$” *with:*

" $N_{1,Rd} = k_n f_{y0} t_0^2 \dfrac{2 + 2.8\beta}{\sqrt{1 - 0,9\beta}} / \gamma_{M5}$ ".

Paragraph “(4)”, “Table 7.13”, *in the following cells:*

Chord side wall crushing	when $b_1 \geq b_0 - 2t_0$
$N_{1,Rd} = f_{y0} t_0 (2t_1 + 10t_0) / \gamma_{M5}$	

“ ”,

in the formula, replace " $f_{y0} t_0$ " *with:* " $k_n f_{y0} t_0$ ".

Paragraph “(4)”, “Table 7.13”, *in the following cells:*

Chord face failure
$N_{1,Rd} = \frac{k_m f_{y0} t_0^2}{1 - t_1 / b_0} \left(2h_1 / b_0 + 4\sqrt{1 - t_1 / b_0}\right) / \gamma_{M5}$

“ ”,

delete: "1 – t_1/b_0" *in the denominator of the formula.*

Paragraph “(4)”, “Table 7.13”, *in the following cell:*

As a conservative approximation, if $\eta \geq 2\sqrt{1-\beta}$, $N_{1,Rd}$ for an I or H section may be assumed to be equal to the design resistance of two transverse plates of similar dimensions to the flanges of the I or H section, determined as specified above. If $\eta < 2\sqrt{1-\beta}$, a linear interpolation between one and two plates should be made. $M_{ip,1,Rd} = N_{1,Rd} (h_1 - t_1)$

“ ”,

add after the last equation:

"$N_{1,Rd}$ is the capacity of one flange;

β is the ratio of the width of the flange of the I or H brace section and the width of the RHS chord.".

34) <u>Modifications to 7.5.2.2</u>

Paragraph “(7)”, “Table 7.14”, *2nd column, 7th row, replace in case of* “Brace failure”*:*

„ $M_{ip,1,Rd} = f_{y1}\left(W_{pl,1} - (1 - b_{eff} / b_1) b_1 h_1 t_1\right) / \gamma_{M5}$ “

with:

“ $M_{ip,1,Rd} = f_{y1}\left(W_{pl,1} - (1 - b_{eff} / b_1) b_1 (h_1 - t_1) t_1\right) / \gamma_{M5}$ “.

Paragraph “(7)”, “Table 7.14”, *2nd column, 4th, 6th, 10th and 14th rows, replace* "0,85 ≤ β ≤ 1,0" *with:* "0,85 < β ≤ 1,0".

Paragraph “(7)”, “Table 7.17”, *replace the table with the following one:*

"

Type of joint	Design resistance
Reinforced with flange plates to avoid chord face failure, brace failure or punching shear.	
Tension loading	$\beta_p \leq 0{,}85$
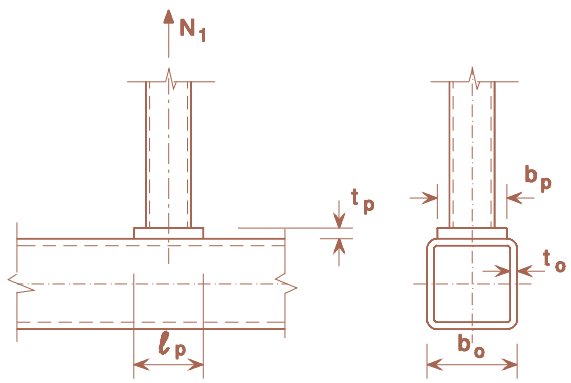	$\ell_p \geq \dfrac{h_1}{\sin\theta_1} + \sqrt{b_p(b_p - b_1)}$ and $b_p \geq b_0 - 2t_0$ $t_p \geq 2t_1$ $N_{1,Rd} = \dfrac{f_{yp} t_p^2}{(1 - b_1/b_p)\sin\theta_1} \cdot \ldots$ $\ldots \cdot \left(\dfrac{2h_1/b_p}{\sin\theta_1} + 4\sqrt{1 - b_1/b_p}\right) / \gamma_{M5}$
Compression loading	$\beta_p \leq 0{,}85$
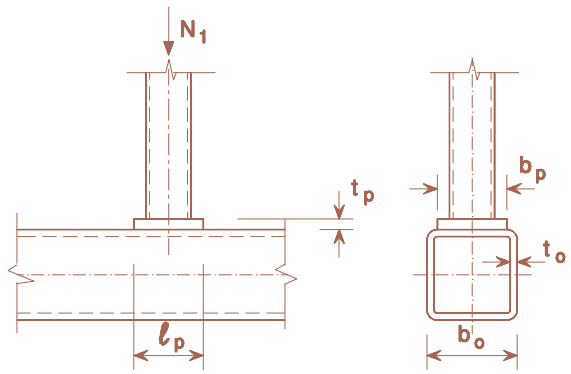	$\ell_p \geq \dfrac{h_1}{\sin\theta_1} + \sqrt{b_p(b_p - b_1)}$ and $b_p \geq b_0 - 2t_0$ $t_p \geq 2t_1$ Take $N_{1,Rd}$ as the value of $N_{1,Rd}$ for a T, X or Y joint from Table 7.11, but with $k_n = 1{,}0$ and t_0 replaced by t_p for chord face failure, brace failure and punching shear only.
Reinforced with side plates to avoid chord side wall buckling or chord side wall shear.	
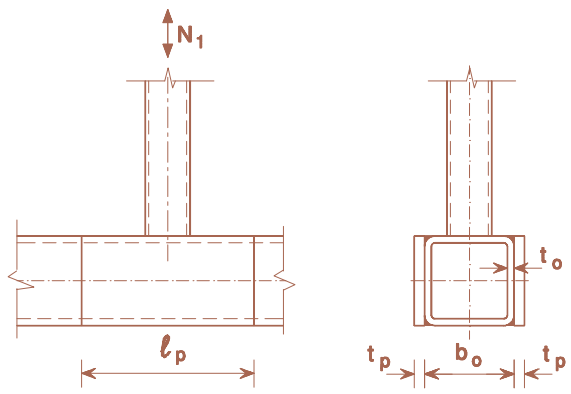	$\ell_p \geq 1{,}5h_1 / \sin\theta_1$ $t_p \geq 2t_1$ Take $N_{1,Rd}$ as the value of $N_{1,Rd}$ for a T, X or Y joint from Table 7.11, but with t_0 replaced by $(t_0 + t_p)$ for chord side wall buckling failure and chord side wall shear failure only.

".

35) Modifications to 7.5.3

Paragraph "(2)", "Table 7.19", *3rd row, 1st column, replace the figure with the following one:*

"

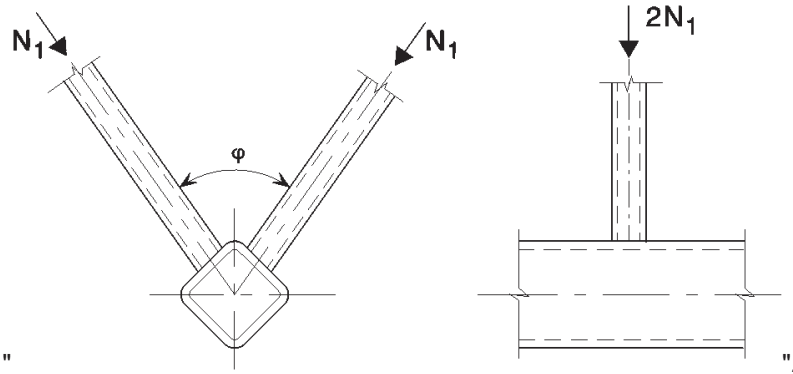

".

Paragraph "(2)", "Table 7.19", *5th row, 1st column, replace the figure with the following one:*

"

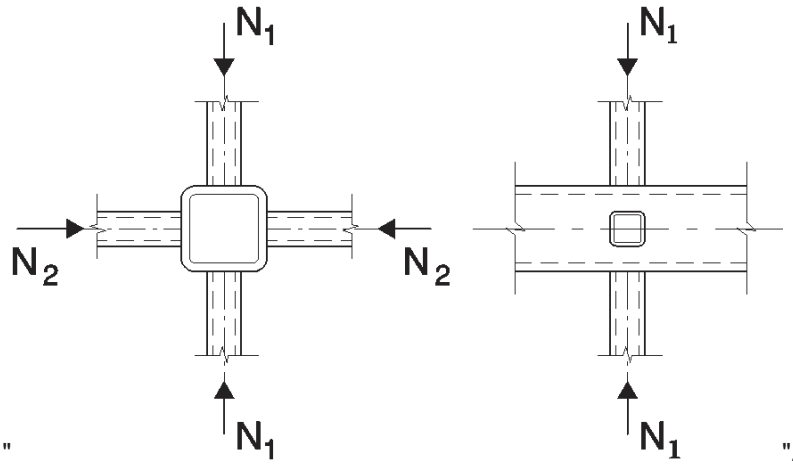

".

Paragraph "(2)", "Table 7.19", *7th row, 1st column, replace the figure with the following one:*

"

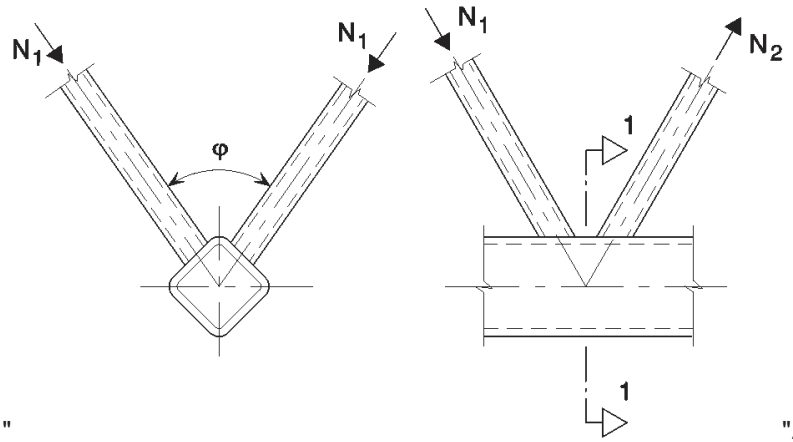

".

36) Modifications to 7.6

Paragraph “(1)”, “Table 7.20”, *2nd row (dedicated to* “X”*), 3rd column (just under* “Compression”*), replace* "Class 1" *with:* "Class 1 or 2".

EN 1993-1-8:2005/AC:2009 (E)

Paragraph “(1)”, “Table 7.20”, *replace all the occurrences of* "class 2" *with* "class 1 or 2".

Paragraph “(1)”, “Table 7.20”, *1st column, last row, add the following line:*

"$25\% \leq \lambda_{ov} \leq \lambda_{ov,lim.}$ [1)]";

then, in a newly created cell at the bottom of the table, add the following note:

"[1)] $\lambda_{ov,lim.}$ = 60% if the hidden seam is not welded and 80% if the hidden seam is welded. If the overlap exceeds $\lambda_{ov,lim.}$ or if the braces are rectangular sections with $h_i < b_i$ and/or $h_j < b_j$, the connection between the braces and chord face has to be checked for shear.".

Paragraph “(2)”,*replace* "the design criteria covered in" *with:* "the failure modes covered in".

Paragraph “(3)”, *replace* "all the criteria given in" *with:* "all the failure modes given in".

Paragraph “(5)”, “Table 7.21”, *2nd column, 6th row from the top, replace* "Chord web stability" *with:* "Chord web yielding".

Paragraph “(5)”, “Table 7.21”, *2nd column, 7th row from the top, replace* "$\sin\theta_i$" *with:* "$\sin\theta_1$"; *then replace* "$N_{i,Rd}$" *with:* "$N_{1,Rd}$".

Paragraph “(5)”, “Table 7.21”, *6th box on the right hand side, move the lower line of the cell a bit downwards so that the signs* “,”, “≤” *and* “≤” *are fully visible in the following equation:* "$0{,}75 \leq b_1/b_2 \leq 1{,}33$".

Paragraph “(5)”, “Table 7.21”, *in the following cells:*

“

K and N overlap joints [*)] [i = 1 or 2]	Brace failure $25\% \leq \lambda_{ov} < 50\%$
Members i and j may be in either tension or compression. 	$N_{i,Rd} = f_{yi} t_i \left(p_{eff} + b_{e,ov} + (h_i - 2t_i)\lambda_{ov}/50\right)/\gamma_{M5}$
	Brace failure $50\% \leq \lambda_{ov} < 80\%$
	$N_{i,Rd} = f_{yi} t_i \left(p_{eff} + b_{e,ov} + h_i - 2t_i\right)/\gamma_{M5}$

“,

in the 1st formula for “Brace failure” *in* “K and N overlap joints”, *replace* "$(h_i - 2t_i)\ \lambda_{ov}/50$" *with:* "$2h_i \frac{\lambda_{ov}}{50} - 4t_i$"; *then, in the 2nd formula for* “Brace failure” *in* “K and N overlap joints”, *replace:* "$+ h_i - 2t_i$" *with:* "$2h_i - 4t_i$".

Paragraph “(5)”, “Table 7.21”, *in the following cell:*

“

$p_{eff} = t_w + 2r + 7t_f f_{y0}/f_{yi}$ but $p_{eff} \leq b_i + h_i - 2t_i$ for T, Y, X joints and K and N gap joints and $b_{eff} \leq b_i + h_i - 2t_i$ for K and N overlap joints.

“,

replace the whole text in the cell with the following one:

“ $p_{eff} = t_w + 2r + 7t_f f_{y0}/f_{yi}$

but for T, Y, X joints and for K and N gap joints:

$p_{eff} \leq b_i + h_i - 2t_i$

but for K and N overlap joints:

$p_{eff} \leq b_i$“.

Paragraph “(5)”, “Table 7.21”, *1st column, 8th row from the top, equation for* “α” *in case of* “RHS brace”, *replace* “α = $\sqrt{\frac{1}{\left(1+4g^2/3t_f^{\,2}\right)}}$” *with:* “$\alpha = \sqrt{\frac{1}{(1+4g^2/(3t_f^2))}}$”.

Paragraph “(5)”, “Table 7.21”, *in the following text extract from a cell:*

For CHS braces multiply the above resistances for brace failure by $\pi/4$ and replace both b_1 and h_1 by d_1 and both b_2 and h_2 by d_2.

“,

replace "h_2 by d_2" *with:* "h_2 by d_2, except for chord shear".

Paragraph “(5)”, “Table 7.21”, *last row, text under* “*)”, *after the last sentence, add:* "See also Table 7.20."

Paragraph “(8)”, *replace* "design bracing failure" *with:* "design brace failure".

Paragraph “(9)”, “Table 7.22”, *in the following cell:*

Chord web yielding
$M_{ip,1,Rd} = 0{,}5 f_{y0} t_w b_w h_1 / \gamma_{M5}$

“,

replace "h_1" *with:* "(h_1-t_1)".

Paragraph “(9)”, “Table 7.22”, *in the following cell:*

Brace failure
$M_{ip,1,Rd} = f_{y1} t_1 b_{eff} (h_1 - t_1) / \gamma_{M5}$

“,

replace "(h_1-t_1)" *with:* "h_z".

Paragraph “(9)”, “Table 7.22”, *replace in the whole table (four times)* "b_{eff}" *with:* "p_{eff}"; *then, in 1st column, last row, replace* "$b_{eff} \leq b_i$" *with:* "$p_{eff} \leq b_1+h_1-2t_1$".

Paragraph “(9)”, “Figure 7.7”, *text below the right hand side figure, replace* "Bracing effective" *with:* "Brace effective".

37) Modifications to 7.7

Paragraph “(3)”, “Table 7.23”, *2nd row, 3rd column, replace* "class 1" *with:* "class 1 or 2".

Paragraph “(3)”, “Table 7.23”, *2nd row, 6th column, replace* "class 2" *with:* "class 1 or 2".

Paragraph “(3)”, “Table 7.23”, *in the following cell:*

"

$25\% \le \lambda_{ov} < 100\%$ $b_i/b_j \ge 0{,}75$

",

replace:

"25% ≤ λ_{ov} < 100%"

with:

"25% ≤ λ_{ov} ≤ $\lambda_{ov,lim.}$ [2)]".

Paragraph "(3)", "Table 7.23", *into the following cell:*

"

$\beta^* = b_1/b_0^*$ $b_0^* = b_0 - 2\,(t_w + r_0)$ [1)] This condition only apply when $\beta \le 0{,}85$.

",

add a second note:

"[2)] $\lambda_{ov,lim.}$ = 60% if the hidden seam is not welded and 80% if the hidden seam is welded. If the overlap exceeds $\lambda_{ov,lim.}$ or if the braces are rectangular sections with $h_i < b_i$ and/or $h_j < b_j$, the connection between the braces and chord face has to be checked for shear.".

Paragraph "(3)", "Table 7.24", *into the following cells:*

"

K and N overlap joints *)	Brace failure $25\% \le \lambda_{ov} < 50\%$
	$N_{i,Rd} = f_{yi} t_i \left(b_{eff} + b_{e,ov} + (2h_i - 4t_i)\lambda_{ov}/50\right)/\gamma_{M5}$

",

in the equation, replace " $\cdot (2h_i - 4t_i)\lambda_{ov}/50$ " *with:* " $2h_i \dfrac{\lambda_{ov}}{50} - 4t_i$ ".

Paragraph "(3)", "Table 7.24", *into the following cell:*

"

For CHS braces except the chord failure, multiply the above resistances by $\pi/4$ and replace both b_1 and h_1 by d_1 as well as b_2 and h_2 by d_2.

",

replace "except the chord failure" *with:* "except for the chord shear".